VISU : Post processing

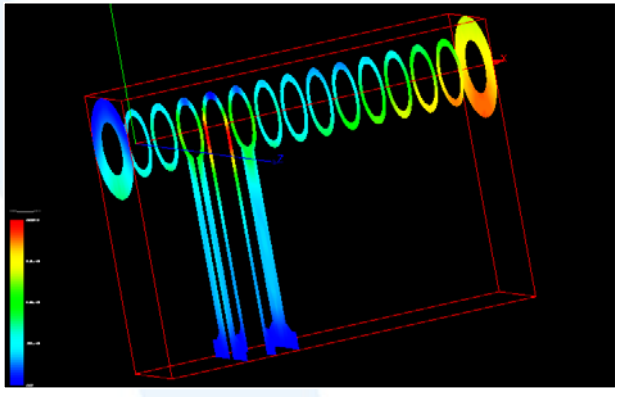

Section plane

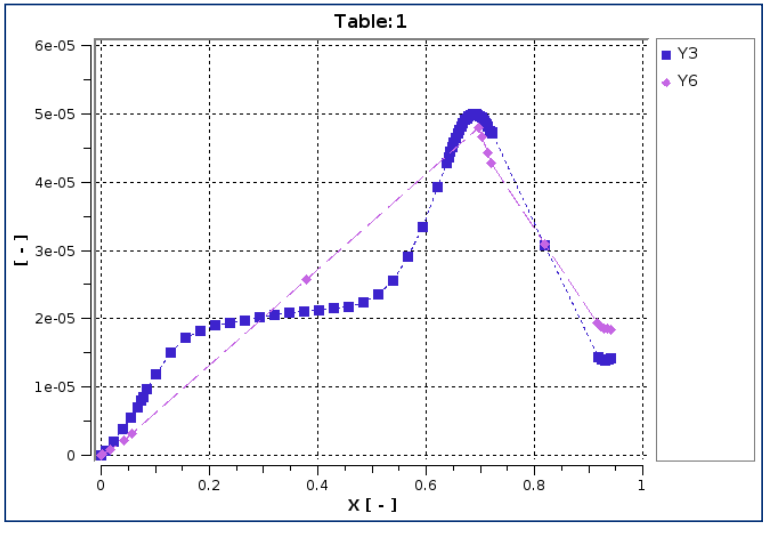

2D evolution curve

VISU : Post processing

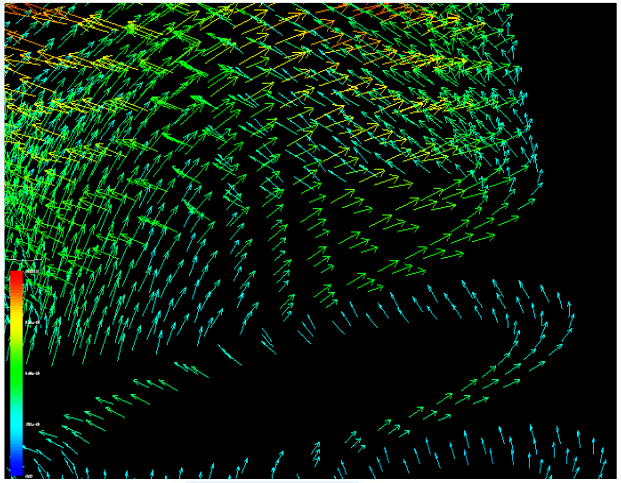

Vectors, stream lines

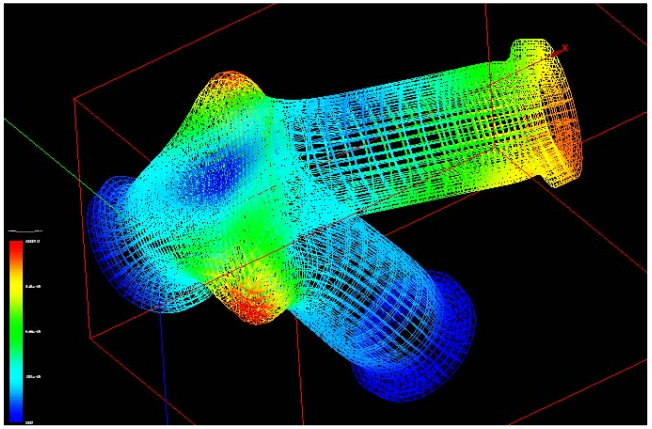

Deformation

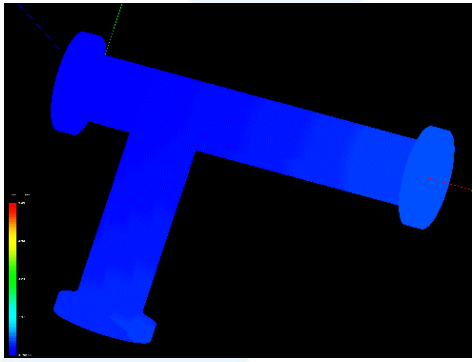

Animation

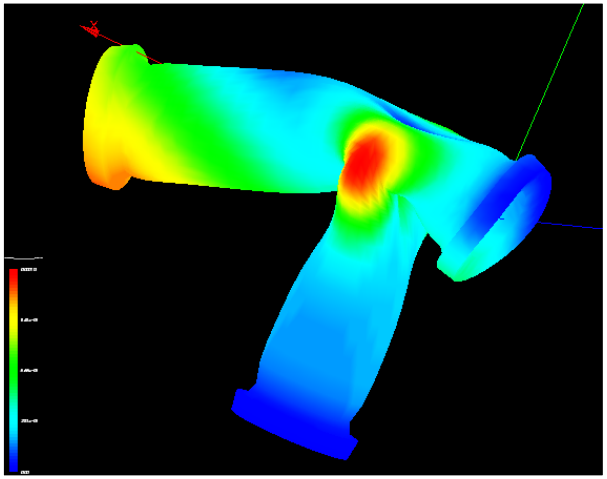

Scalar map on deformed shape

VISU : Post processing

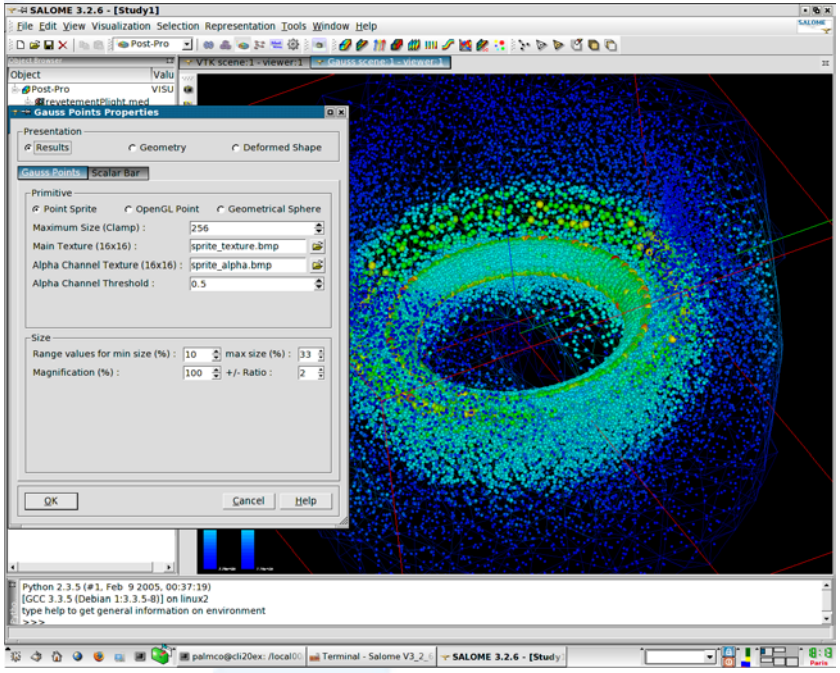

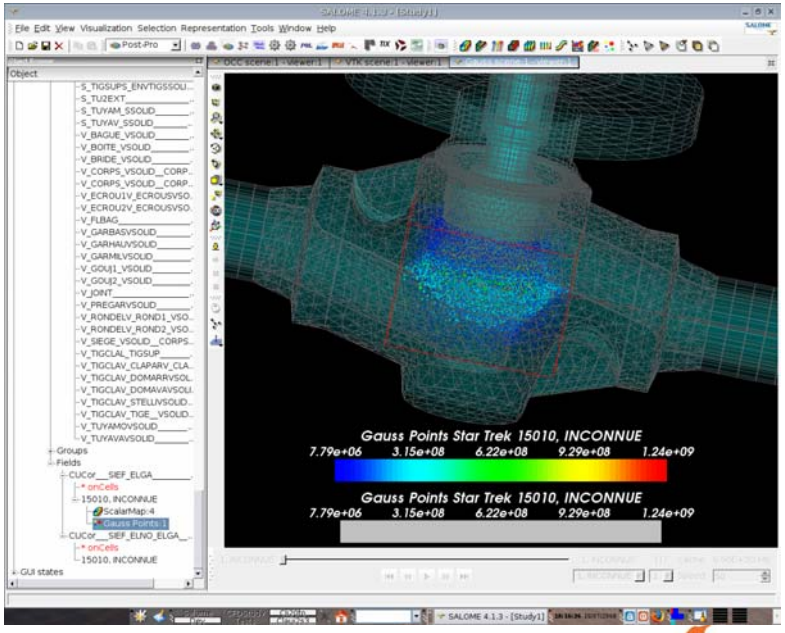

Gauss points

YACS : Code Coupling

YACS : Code Coupling - Objectives

- It helps to implement a simulation
  - In integrating existing numerical codes
    - Component model
    - Allowing internal parallelism in the codes
  - In trying to be as less intrusive as possible
  - In using distributed resources
  - In defining and executing a calculation schema
    - Possible parallelism in the schema
- YACS means dYnamic pArallel Coupling Supervisor

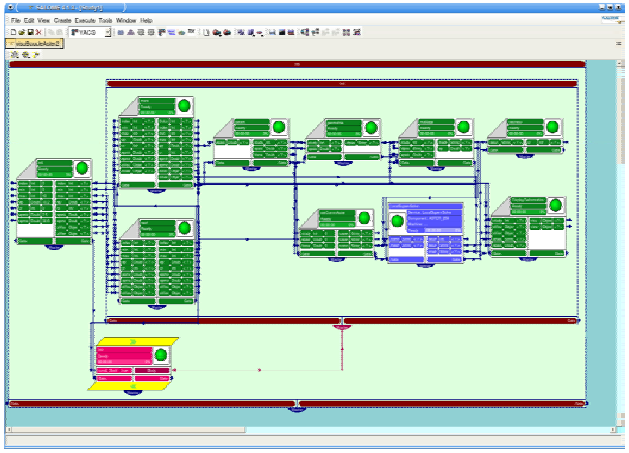

YACS : Code Coupling - Objectives

- Different kinds of applications
  - Sequence of codes
    - Input data are available on start
    - Output data are generated at the end

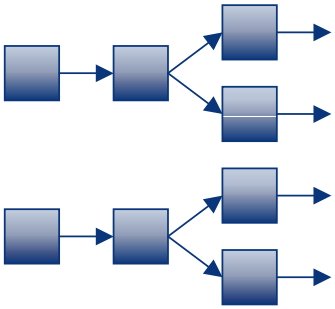

  - Code coupling application
    - Input and output data are transferred during the execution of the codes

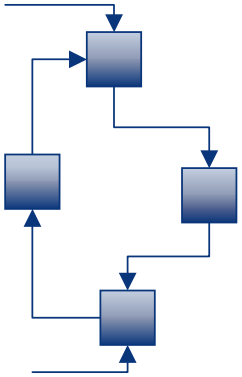

YACS : Code Coupling -Component model : Three types of interactions

- Workflow: A then B (no data)

- Dataflow: weak coupling

- Datastream: strong coupling

YACS : Code Coupling - Component model : Ports

- Each service has:
  - Ports: input and output of a node
    - Workflow (named Gate)
    - Dataflow
    - Datastream
  - Links: connections between ports

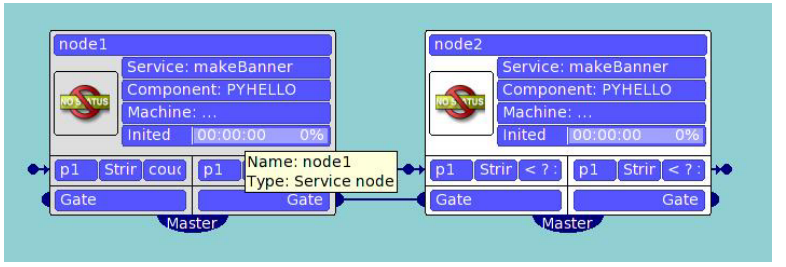

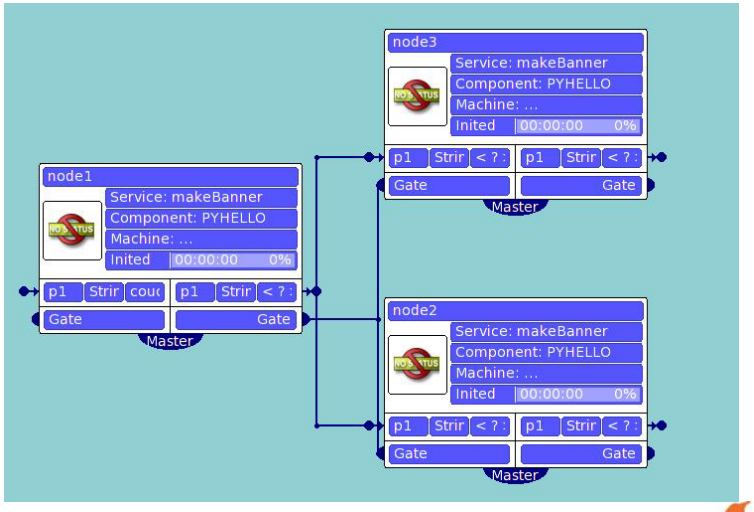

YACS : Code Coupling - Calculation schema

- A calculation schema is composed of nodes:
  - Service: computational task (numerical codes)
    - Dynamic library
    - Executable
  - Python: python script executed into YACS process
  - Control: loop, switch, …

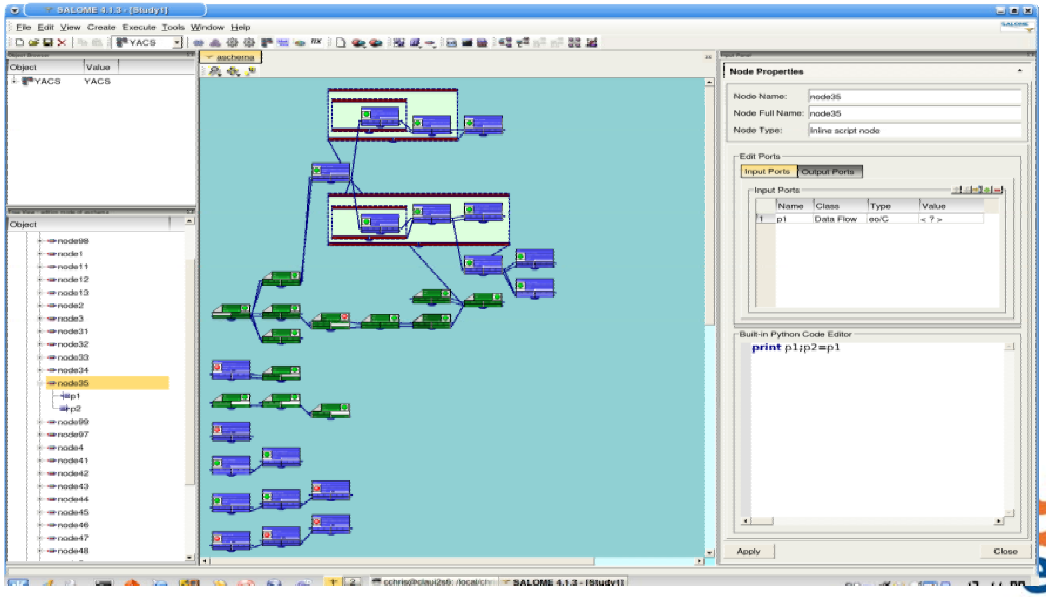

YACS : Code Coupling - Component model

- A service is described into an XML file read by YACS

```
<component-list>
  <component>
    <component-name>MySalomeComponent</component-name>
   <component-service-list>
     <component-service>
       <service-name>Example</service-name>
        <inParameter-list>
           <inParameter>
            <inParameter-name>InParam</inParameter-name>
            <inParameter-type>string</inParameter-type>
```

YACS : Code Coupling - Deployment Issue

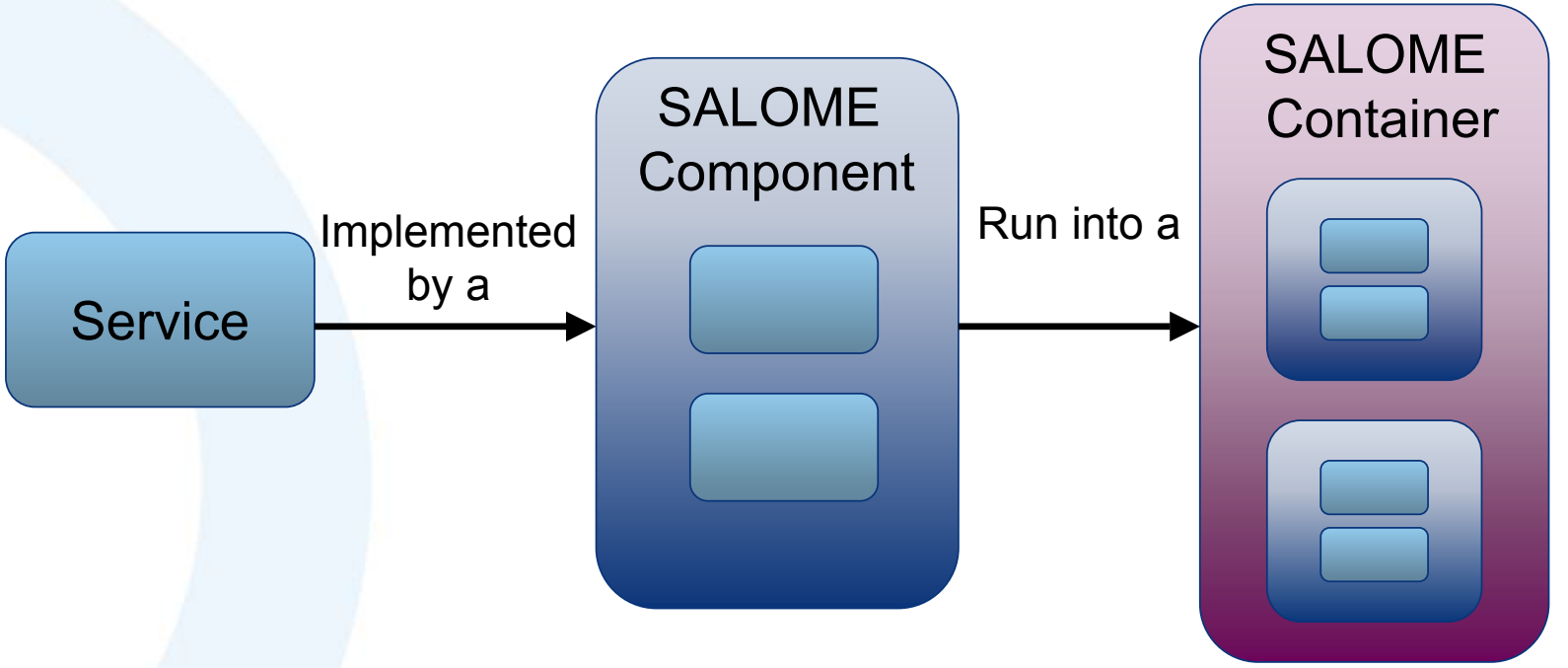

YACS : Code Coupling - Deployment Issue

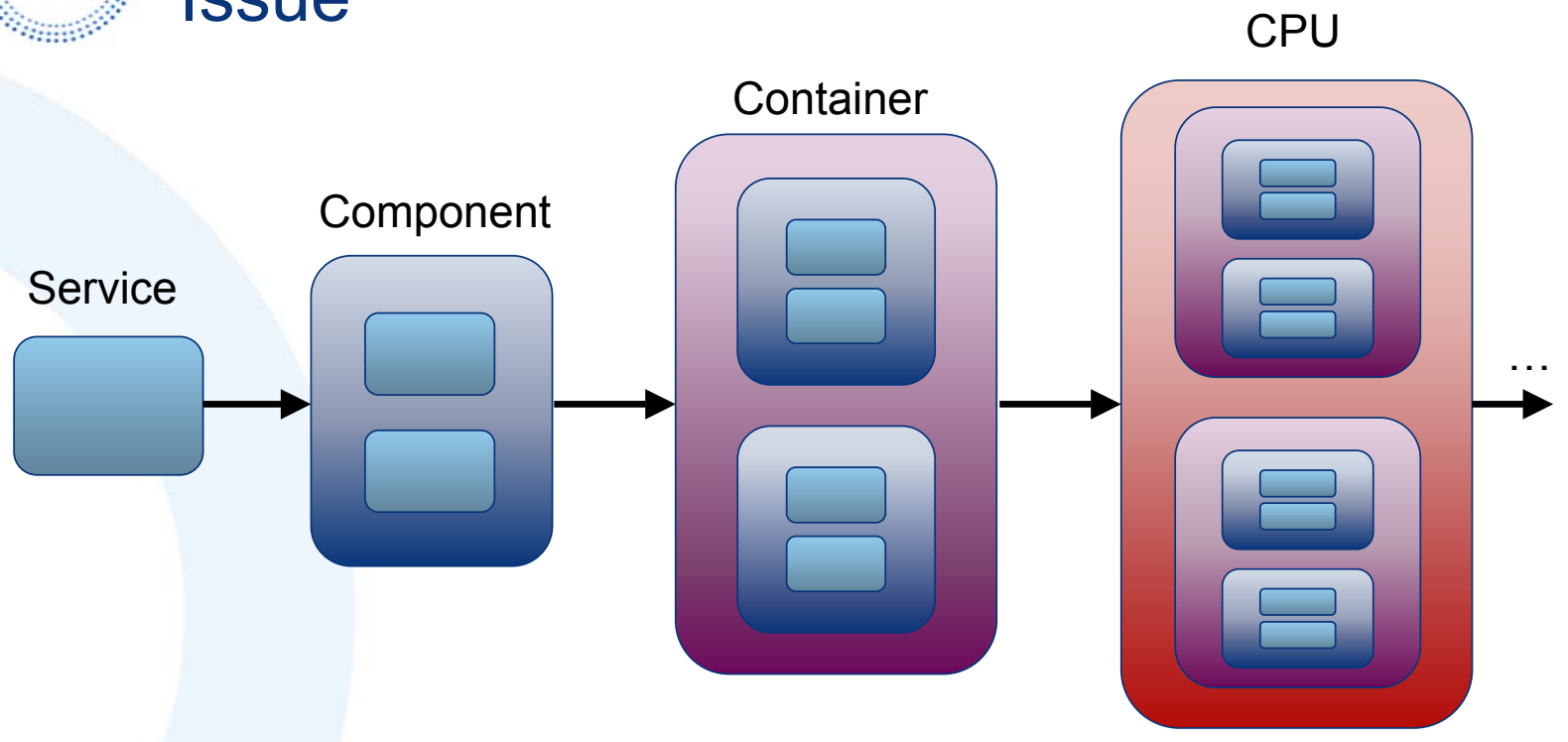

- A CPU resource is described into an XML file read by SALOME
- Into a schema, a user can choose a specific deployment or SALOME can choose where the service will be executed

YACS : Code Coupling Examples
Calculation schema with Dataflow

- Using geometry, mesh, mechanic and visualization
  - Parametric application on the bridge's thickness

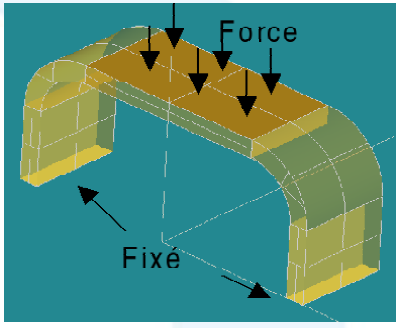

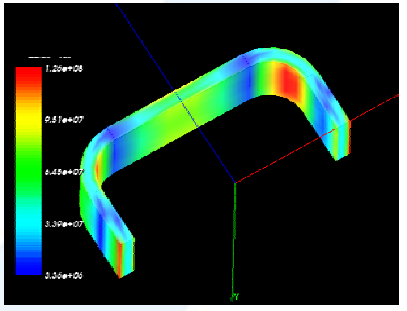

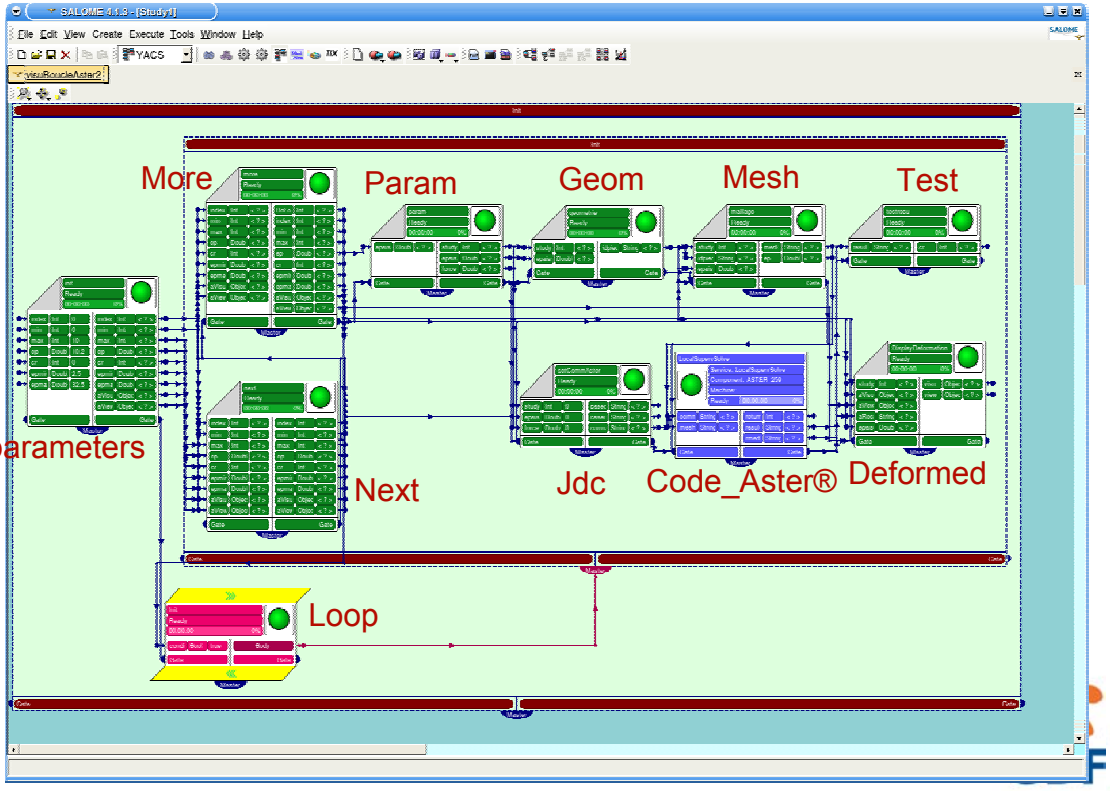

YACS : Code Coupling - Examples
Fluid dynamics – Mechanic coupling

Vibrations

Water flow

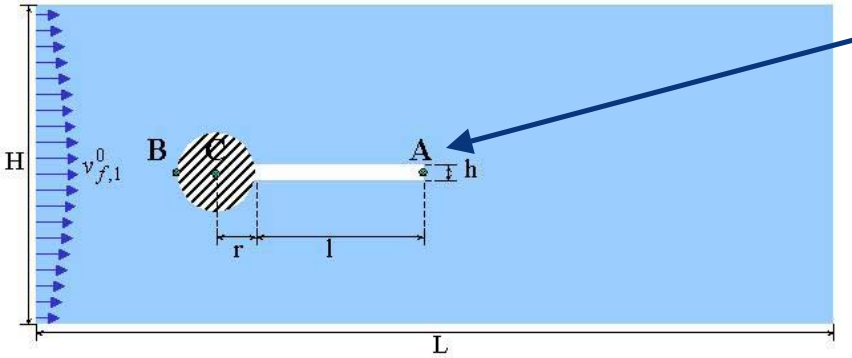

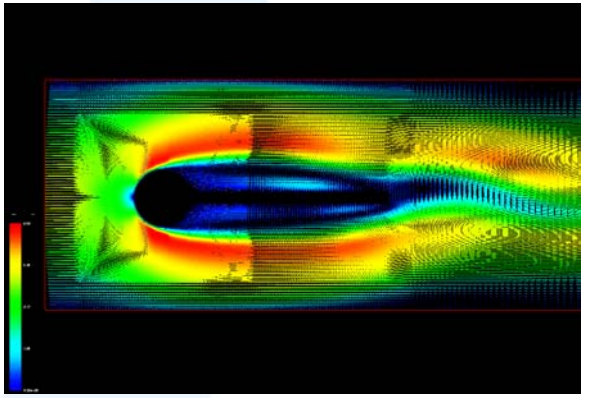

Velocity field

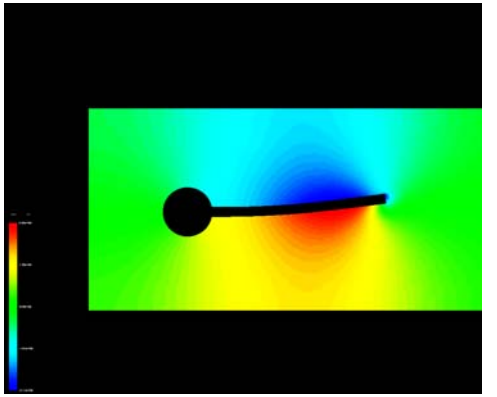

Pressure field into a deformed shape

YACS : Code Coupling - Examples
Calculation schema with Datastream

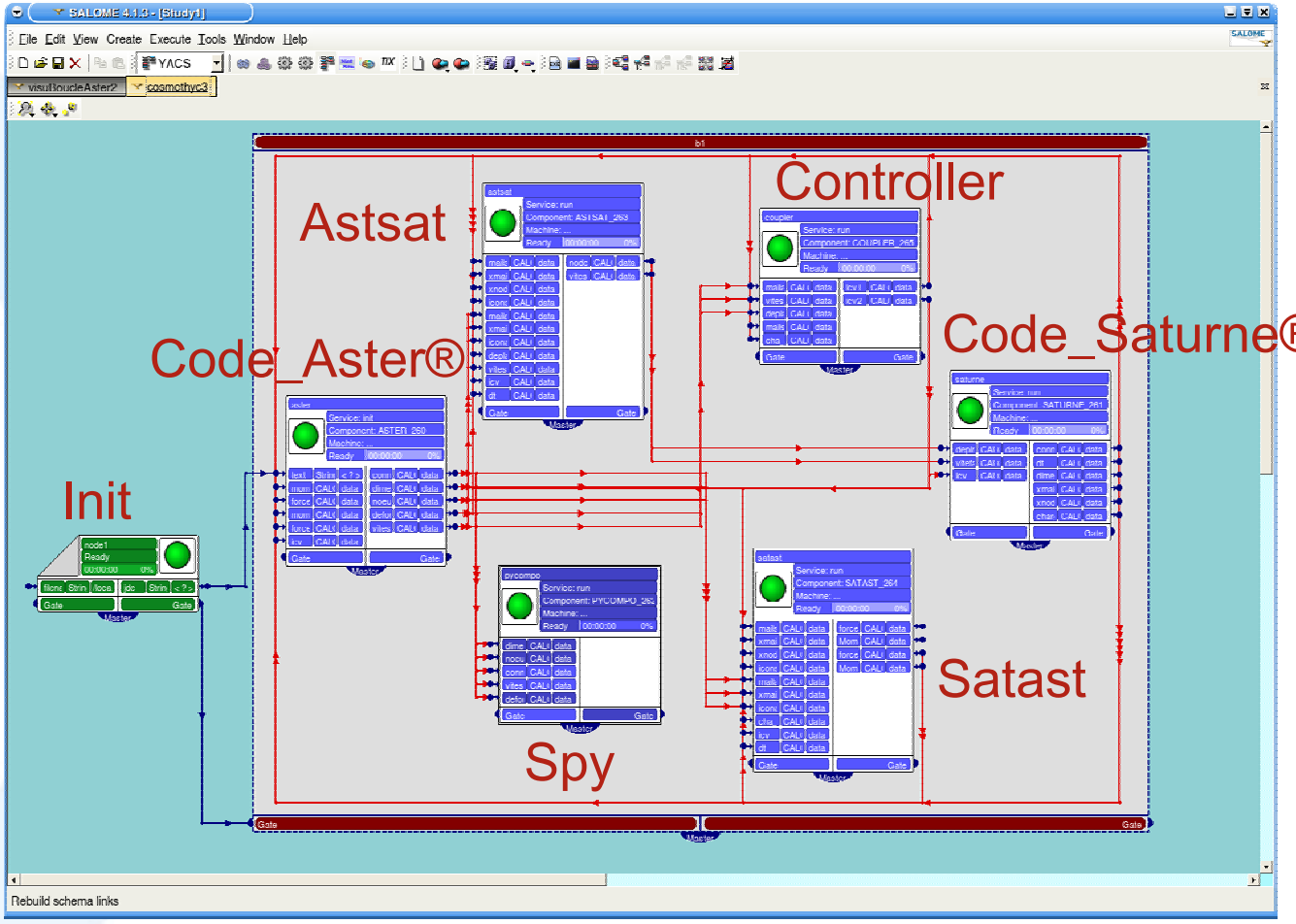

YACS : Code Coupling - Examples
Parametric application
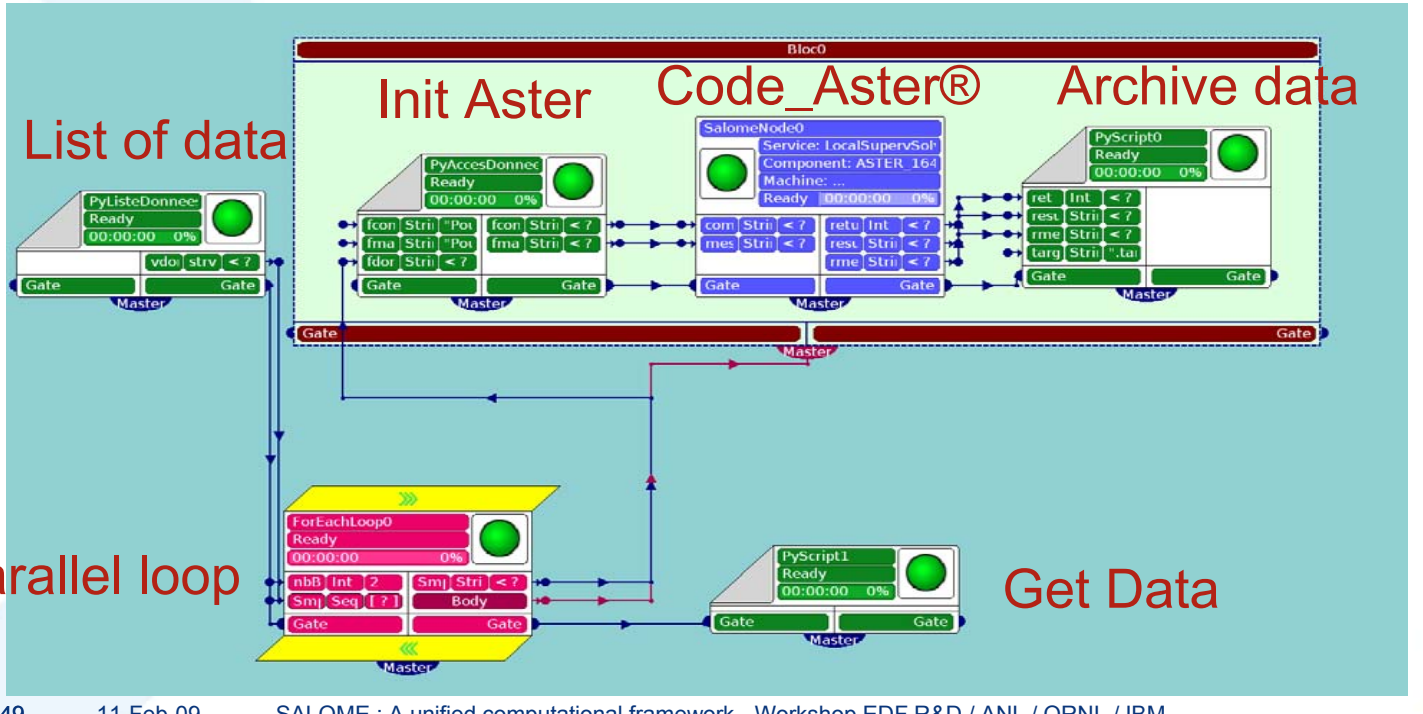
- Workflow application using a ForEach node (parallel loop)
  - Configure it with a number of branches
  - Use SALOME deployment service to distributed the work